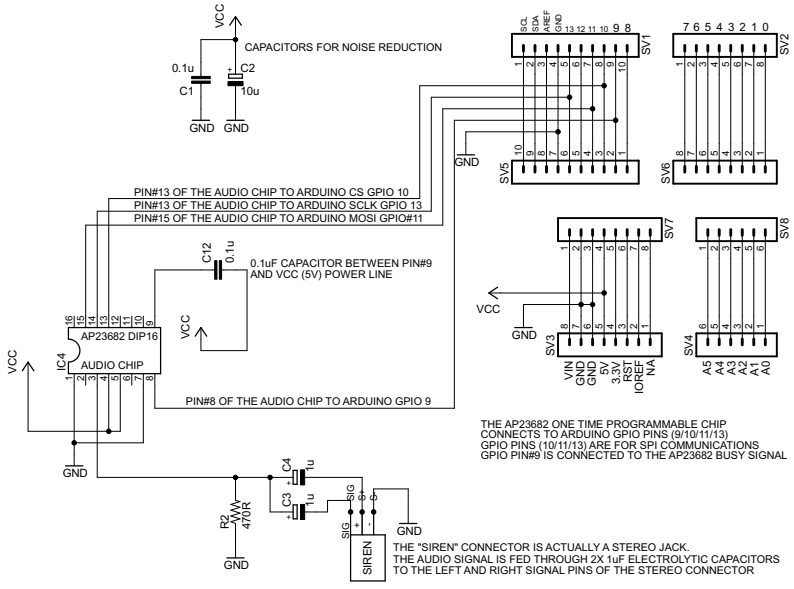

11/04/2016 2:04:01 PM f=0.60 C:\Users\Patrick\Documents\eagle\Arduino 100 Word\Shield.sch (Sheet: 1/1)