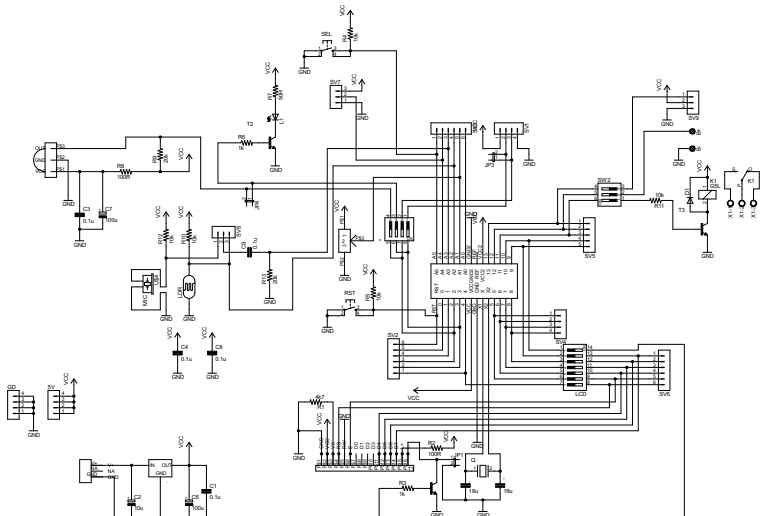

12/04/2017 2:40:33 PM f=0.30 C:\Users\Patrick\Documents\eagle\Arduino Student\Ultra.sch (Sheet: 1/1)