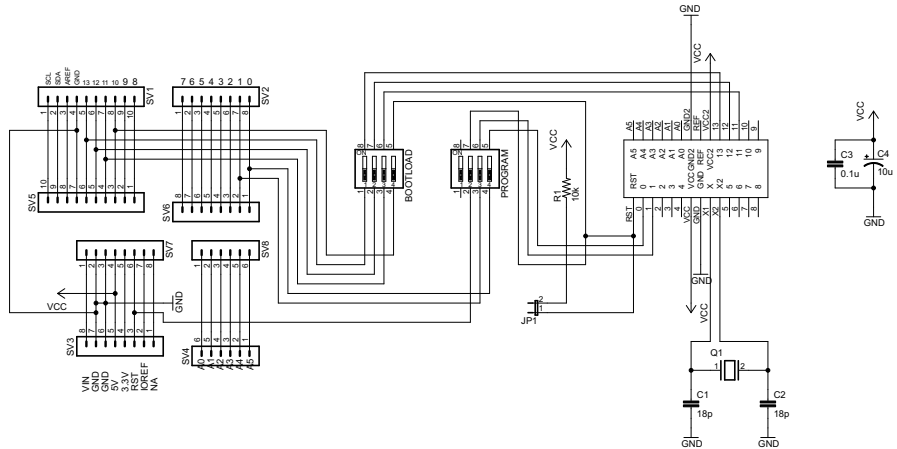

27/05/2015 11:07:53 PM f=0.50 C:\Users\Patrick\Documents\eagle\Arduino Shell\Shield.sch (Sheet: 1/1)