The 10-Bit Arduino Compatible Infrared Learning Processor Board Set

Brought to you by:

ENGINEERINGSHOCK ELECTRONICS

FEATURES:

- 10x Programmable (Arduino Compatible) Outputs
- EEPROM Memory To Save Data After Power Off
- Version#1 Comes With Indicator LEDS & 2x Relays
- Version#2 Can Be Powered Directly From Your Arduino
-Three Modes Of Operation (Momentary/Active High-Low Latching Modes)
- Compatible With Most IR 38kHz Modulated Remote Controls

Infrared Learning Processor Board Set

e sincerely hope that you find many fun and creative uses for this unit. Whether you've purchased the Version#1 or Version#2 boards, you will not be disappointed. Please pay close attention to all sections of this manual. The PROGRAMMING section is extremely important, so please be sure to read it carefully. The peripherals are all discussed in the "Projects" section of this manual.

Table of Contents

Included Parts (Parts Vary Depending On Purchase):

1x Version#1 or Version#2 board (Depending on purchase)
1x 9v 1000mA wall adapter (Depending on purchase)
12x Wire connectors
5x 2-pin header jumper (Depending on purchase)
1x 8-channel relay board (Depending on purchase)

Safety & Disclaimer

The AC adapter to this kit regulated 120VAC down to a mere 9VDC, which is harmless to human skin, but if you choose to use the on-board relay to control AC devices, you need to have someone with you. You can follow along with me, but if you have not done this before, it is imperative that you take your safety into consideration. It is of the utmost importance. I will not be held accountable if you hurt or kill yourself from carelessness. If you use the relay to control high power devices as opposed to the siren, and you do not take it seriously, you will be in danger. **BE CAREFUL**, and have someone with you who has experience with high voltage.

The 7805 5v regulator may get warm when the relays are active (Version#1). Try to refrain from touching it. It shouldn't get hot enough to burn you, but you should keep this in mind. If you notice that the 7805 gets **very hot**, then something is likely wrong. Always be aware of what you are doing with this board, and you will be just fine. If you have questions regarding what may be safe or what may not be safe, I can always be contacted at engineeringshock@hotmail.com.

The Video Manual & Assembly Videos:

I'm a visual person. The below manual gets down to the nitty-gritty, but the video manual really shows you the hands-on approach. I cover all functionality and all hook-up instructions for both versions of the board in this video. Please take the time to watch it. I've also enclosed the assembly videos for those of you who are building from scratch. Part lists are talked about in these videos.
Video Manual: https://www.youtube.com/watch?v=lSlJI4Rbl0M
Assembly Video: https://www.youtube.com/watch?v=faQGGx8SmUI

The Wire Connectors:

These Female-Female wire connectors are used to connect your IR learning board to an external circuit or platform. They connect easily to the on-board connector rail for both version#1 and version#2 boards.

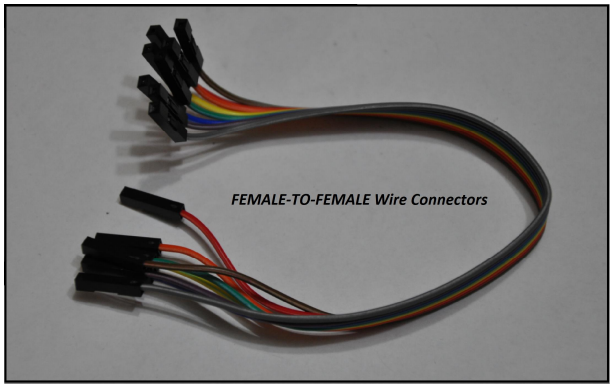

The 9v 1000mA (120-240VAC to 9VDC) AC-DC Power Adapter:

These power supplies are compatible with any input voltage between 120VAC and 240VAC (For those of you find people overseas). All you need to do is plug the AC adapter into the board. There is a 5mm power jack on the board, and the adapter plugs in directly.

The 2-Pin Header Connectors:

In the case of the Version#2 board, you'll need one of these bad-boys to enable power from the 5mm power jack. For both versions of this IR learning board, you'll need these jumpers to left modes, enable LEDs/relays, etc.

The Infrared Remote Control:

This is the remote that comes with your infrared learning board set. It has 21x buttons that each have their own unique infrared code. You can use your own infrared remote control, but not all remote will be compatible with this set. This specific remote is 100% compatible with this set, and comes with its own battery. In order to apply power to this remote, you will need to remove the plastic tab on the back of the remote. This tab acts as an insulator between the battery and the power terminals on the inside of the remote. Once you remove this tab, your remote will be powered and ready to go. This remote requires a single CR2032 3v battery. You can pick up packs of three from any dollar store for a buck.

The 21-Button Remote Control

The 8-Channel Relay Board:

This relay board can be controlled with both the version#1 and version#2 infrared learning boards, but may require an external power supply depending on your application and which version you are using. This video talks about this in great detail: https://www.youtube.com/watch?v=Vd-g3qrpZ70

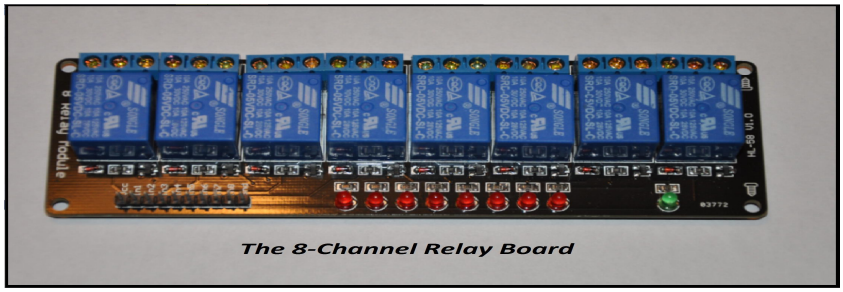
The 8-Channel Relay Board

& Operation:

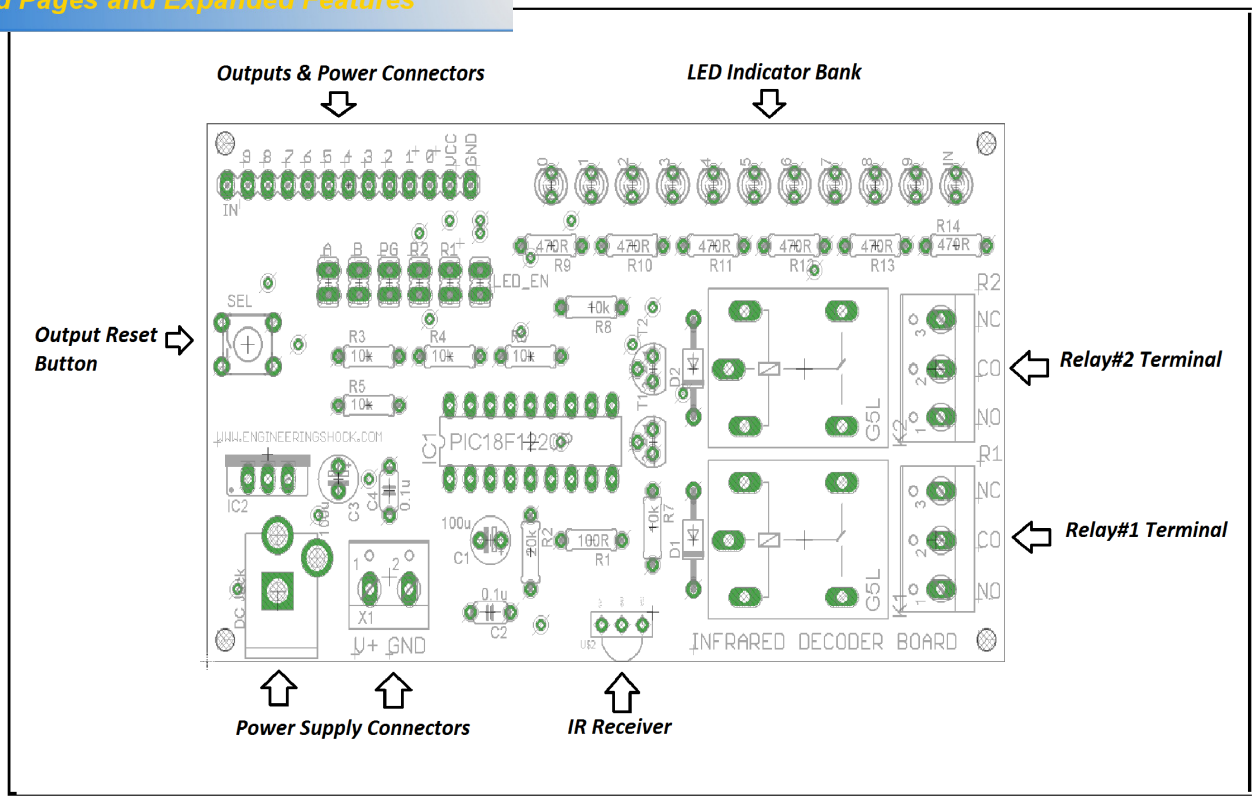

The Power Supplies:

The DC power jack is the primary power supply option. Simply connect the AC adapter to this port, and you're off to the races. But wait, what If I don't want to use the AC adapter? WELL YOU'RE IN LUCK MY FRIEND! You can use the Secondary power input terminal block (Seen in the above picture). There are two pins. V+ is where you'd connect a voltage of 8-10VDC. Your power supply much support 700mA or higher. Preferably 1A or more. The GND terminal is where you'd connect your supply ground.

The IR Receiver:

This little guy detects the incoming infrared signal and sends it to the PIC18 MCU for processing.

The Jumpers:

There are six 2-pin header connectors on the Version#1 board. Depending on how you've customized your operation, you will need at least a couple of jumpers to enable the relays/LEDs, or select mode of operation. Below, we will talk about the jumpers from right to left.

LED_EN: If you have a jumper shorting these two pins, the power will be able to reach the LEDs. This header acts as a common ground connection to the LEDs. If connected, then the LEDs can function. If disconnected, it essentially saves power.

der is shorted when powering up the unit, you will enter into
ıode section of this document for more information.

B: If the program header is not shorted by a jumper, and the "B" header is shorted by a jumper, then you will be in latching mode. If the program header is not shorted by a jumper, and the "B" header is also not shorted, then you will power the device up in momentary mode.

A: This jumper is only used if the program header is not shorted by a jumper, and if the "B" jumper is shorted by a jumper. If the "A" header is not shorted, then the unit will be in latching mode. If the "A" header, AND "B" header are shorted by a jumper, but the program header is not, then you will power the device up in Active-Low latching mode, which means that all outputs are asserted upon power up; meaning that all outputs are high (5v).

R1: If this header is shorted with a Jumper, then relay#1 will be enabled (To be driven by output signal#9). If this header is not shorted, then this relay will remain unused.

R2: If this header is shorted with a Jumper, then relay#2 will be enabled (To be driven by output signal#8). If this header is not shorted, then this relay will remain unused.

The Relay Connector Terminal Blocks:

The Version#1 board has two on-board relays that you may or may not choose to employ. You can use the three-pin terminal blocks for Relay#1 and Relay#2 to control external devices such as AC devices (up to 40 Watts). You can also control DC devices, such as motors and solenoids if you wish. Please watch the video manual for a full demonstration. The relays switches are internal to the relay, and are isolated from the rest of the circuitry. Each relay has a three-pin terminal block. The three pins each have their own function:

CO: (Common pin) – When the relay is off, this pin connects to the **NC (Normally closed) pin**. When the relay is activated, the common pin disconnects from the NC pin and connects to the **NO (Normally Open) pin.** When the relay is deactivated, the CO pin disconnects from the NO pin, and reconnects to the NC pin.

Think of the relay as a light switch. It connects or disconnects power internally. If you have say another circuit that you want to power only when the relay is activated, take the power supply that will power your circuit, and connect it to the CO pin. Take the power supply line to your load, and connect it to the NO pin. When the relay turns on, it connects these two lines internally. When the relay turns off, it disconnects these two lines. If you wanted to have a circuit that was on by default, and turned off when the relay is activated, simply connect the power supply that will power your circuit to the CO pin, and the supply line to your board, and connect it to the NC pin. When the relay is not activated, the CO and NC pins are connected to one another internally (Within the relay). These two pins will disconnect from one another when the relay is activated, which will act to disconnect the relative power supply from the power supply input to your circuit. If you want to know more, have a look at this: http://www.learningaboutelectronics.com/Articles/How-to-connect-a-single-pole-double-throw-relay-in-a-circuit

d. These LEDs can be enabled or disabled with ease. They act as indicators that help you during programming and during latching/momentary operations. They tell you which outputs are on, and which are off. If you have the LED_EN header shorted by a jumper, then power will reach the LEDs when an output is high (5v). If you are happy with your operation, and no longer require the LEDs, simply remove the LED_EN jumper. The LEDs are labelled 0-9, and mirror the logic on the output pins 0 through 9. The "IN" LED is the indicator LED that is used during program mode, and during normal operation. Please see the video manual for more information.

The Output & Power Connections:

This is your output block. You can connect to the programmed output pins and the indicator signal here. The indicator signal mirrors the logic in the "IN" LED. There is also a ground line here that you can splice to "GND". If you are going to connect to an external circuit, you're going to need to connect the GND line from the learning board to your external circuit for all included circuits to cooperate. Lastly, there is a regulated 5v line (VCC) on this output block that can support up to 400-500mA. This can be used to power external circuits.

The Output Reset Button (SEL):

You will use this button to reset all outputs back to default state when in latching modes. If you are in active-high latching mode when you press this button, then all outputs will clear (0v). If you are in active-low latching mode when you press this button, then all outputs will set (5v). This button has no use in momentary modes of operation, but will be used in one of the two program modes. **Please see the operation & programming section.**

Version#1 Operation & Programming:

When you power the device on for the first time, you'll need to program in your codes. There are two program modes. One is simple, and one is more customized. The simple programming method is called the "Default programming method". The customized method is called the "Secondary programming method". The default method allows for you to program in eleven codes at once and in order (Ten codes that correspond to outputs 0-9, and one code that acts to remote reset all outputs in latching modes). This takes all of 15 seconds if you have a compatible remote control. The secondary method allows for you to program in an infrared code, and select which output said code will correspond to.

Default Programming Method:

Before you power the device up for the first time, place a jumper on the LED_EN header, and on the PG (Program) header. Leave the R1/2 and A/B headers alone. **MAKE SURE THAT THEY ARE NOT SHORTED WITH JUMPERS.** Have your remote control ready, and make sure to know in advance which buttons on your remote that you want to program in for each output. In the video manual, I program in buttons 0-9 on the included remote to correspond to outputs 0 through 9 on the board. This means that if I am successful in programming, when I press button 5 on the remote, then output 5 on the learning board

up button on the remote for the 11th code, which acts to reset atching modes. If this is confusing to you, please watch the video, as it is very easy to follow. Anyhow, when you power up the device, press the "0" button on the remote. The "IN" LED will light up for as long as you are holding the button, then turn off when you let go of the button. When the "IN" LED goes out, you know that you've successfully programmed in a successful code for output#0. Now, follow the same steps for buttons 1-9, and the volume up key. Every time you press a button, the "IN" LED will turn on, then off when you let go. After you have programmed in the 11th and final code, the "IN" LED will stay on. You're all done programming! **Disconnect power and wait ten seconds. During this time, remove the PG header jumper and place it on the "B" header. This will enter you into active-high latching mode. This is a solid test.**

MAKE SURE THAT YOU WAIT TEN SECONDS BEFORE RE-APPLYING POWER TO THE DEVICE OR ELSE THE PROGRAMMED CODES MAY BECOME CORRUPTED.

Once you've performed the task stated above, and you've waited a minimum of ten seconds, plug power back in, and the programmed buttons from your remote should activate the relative outputs talked about above. AS long as you have the LED_EN jumper connected, you should be able to see this visually on the indicator LED bank. If you only get a response out of the "IN" LED, then you were unsuccessful. Try again, and wait longer before applying power in latching mode. **The reason why you need to wait so long after disconnecting power is because the on-board capacitors need to discharge. If they are not fully discharged before you power the unit back up, it can confuse the programmed microcontroller.**

The Secondary Programming Method:

This method is more in depth, and requires patience. In this mode, you can program in a code from your IR remote control, and select which output it will correspond to. Before you power the device up for the first time, place a jumper on the LED_EN header, and on the PG (Program) header. Leave the R1/2 and A/B headers alone. **MAKE SURE THAT THEY ARE NOT SHORTED WITH JUMPERS.** Once you have the jumpers set, press and hold the "SEL" button on the left side of the board and apply power to the device. The "IN" LED should blink a few times, then stay on until you remove your finger from the SEL button. When you remove your finger from the SEL button, the "IN" LED will turn off. At this point, the device will wait for you to enter a code from your infrared remote control. Press any button on your remote, and the "IN" LED will light back up, and stay lit until you've let go of the button on your IR remote control. At this point, the infrared code has been saved, but needs to be allocated to an output. Press the "SEL" button, and hold it down. You'll see the "0" LED light up for about two seconds. If you continue to hold down the "SEL" button, then the "0" LED will turn off, and the "1" LED will turn on. If you wait two more seconds, the "1" LED will turn off, and the "2" LED will turn on. This will continue as long as you hold down the "SEL" button. The LEDs will turn on and off from 0-9, through to the "IN" LED, which corresponds in this case to the remote reset code. If you continue to hold on to the "SEL" button, then the LED sequence will reset to the "0" LED. At any point, you can remove your finger from the SEL button. Whichever LED is lit up at the time that you remove your finger from the "SEL" button will be the output that will be activated by the IR code that you programmed in. For instance, if you

te control, and you let go of the "SEL button when LED "5" ur remote will be saved internally and will correspond to the output#5 LED/Pin. It sounds complicated, but it isn't really all that difficult. Watch the video manual for a full demonstration. Once you've programmed in a code, the unit will wait for another infrared code from the IR remote. Press a different button on the remote, and use the steps above to program that code to correspond to a different output. After a code has been programmed, you can remove power. **DO NOT REMOVE POWER DURING A PROGRAMMING ACTION! ONLY REMOVE POWER ONCE YOU'VE PROGRAMMED IN AS MANY CODES AS YOU'D LIKE.**

Latching Modes:

Active High Latching Mode: In this mode, all of the outputs start off at 0v (LOW). The outputs & corresponding LEDs will toggle high when a correct code is received from the infrared remote that you are using. If you press a button in your IR that corresponds to an output line, then the relative output will toggle high and stay high until you press the same button again. When you press that same button one more time, the same output will toggle from high to low (5v to 0v). You can press the 11th code to reset all outputs to 0v state (clear). You can also manually reset all outputs to the 0v state by pressing the "SEL" button. **Jumper Sequence: Do not short A/PG headers. Short B header. LED_EN/R1/R2 headers are optional.**

Active Low Latching Mode: In this mode, all of the outputs start off at 5v (HIGH). The outputs & corresponding LEDs will toggle low when a correct code is received from the infrared remote that you are using. If you press a button in your IR that corresponds to an output line, then the relative output will toggle low and stay low until you press the same button again. When you press that same button one more time, the same output will toggle from low to high (0v to 5v). You can press the 11th code to reset all outputs to 5v state (set). You can also manually reset all outputs to the 5v state by pressing the "SEL" button. **Jumper Sequence: Do not short PG header. Short A/B headers. LED_EN/R1/R2 headers are optional. Please note that if you enable the relays via shorting R1/R2 headers in this mode, that the relays will both be turned on when you power up the device.**

Momentary Mode: In this mode, all of the outputs will be low (0v) when you power up the device. If you press a button on your IR remote that corresponds to a certain output on the learning board, then that output will go from 0v to 5v for as long as you hold down that specific button on your IR remote control. Once you let go of this button, the relative output will return to the 0v state. Only one output can be turned on at one time. The "SEL" and 11th infrared reset code do not have any effect in this mode. **Jumper Sequence: Do not short A/B/PG headers. Leave them all disconnected. Shorting the LED_EN/R1/R2 headers are optional.**

& Operation:

Please note that this section will contain some copy & paste, as the functionality of the Version#2 board is virtually the same as the Version#1 board.

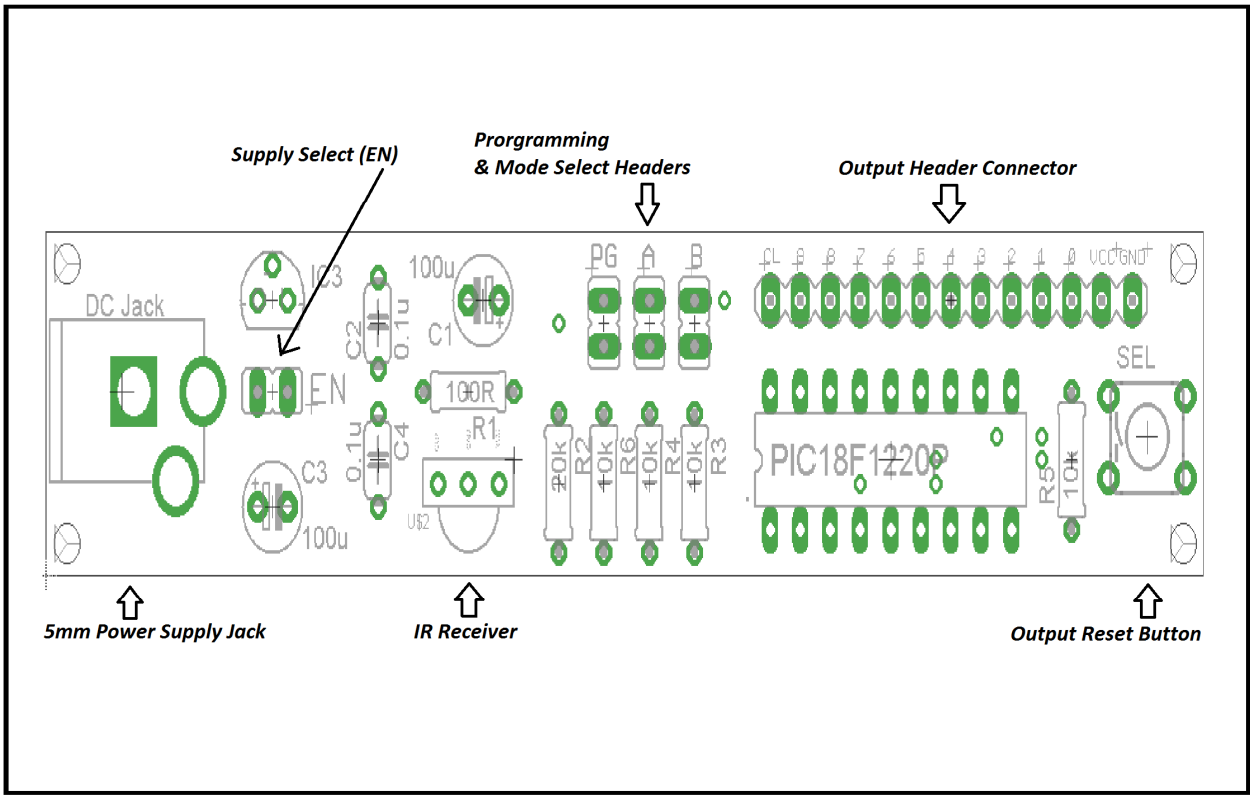

The Power Supplies (DC Jack or Arduino Power):

The DC power jack is the main power supply option. Simply connect the AC adapter to this port, and you're off to the races. **However, this unit has a unique function. You can disconnect the "EN" jumper and power this board using your Arduino if you'd like.** You do not necessarily need to power this unit via the DC power jack. If you remove the **"EN"** jumper, then you can connect the **GND** line from your Arduino board to the GND on the **Output Header Connector**. You will also need to connect the 5v line from your Arduino to the **VCC** line on the **Output Header Connector**. Here there, as long as you've disconnected the "EN" jumper, then when you plug in your Arduino, you'll be powering your Version#2 learning board as well!

The Output Reset Button (SEL):

You will use this button to reset all outputs back to default state when in latching modes. If you are in active-high latching mode when you press this button, then all outputs will clear (0v). If you are in active-low latching mode when you press this button, then all outputs will set (5v). This button has no use in momentary modes of operation, but will be used in one of the two program modes. Please see the operation & programming section.

ns:

to the programmed output pins and the indicator signal here. **On the Version#2 board, the indicator signal is called "CL". Please make note of this.** There is also a ground line here that you can splice to "GND". If you are going to connect to an external circuit, you're going to need to connect the GND line from the learning board to your external circuit for all included circuits to cooperate. Lastly, there is a regulated 5v line (VCC) on this output block that can support up to 50mA safely. No more. The regulator on the board is very small, and can only handle a small amount of current. This can be used to supply external circuits with a regulated 5v as long as the external device consumes no more than 50mA of current. **The version#2 board does not have indicator LEDs on the main board. You'll need to hook up an external LED and 300-600 ohm 1/4W resistor in series with an output and ground to visually see the signals. This is talked about in the video manual, so please be sure to watch it.**

The IR Receiver:

This little guy detects the incoming infrared signal and sends it to the PIC18 MCU for processing.

The Jumpers:

There are three 2-pin header connectors on the Version#2 board that control operation, and one that has an influence on power. Depending on how you've customized your operation, you will need at least a couple of jumpers to select mode of operation & mode of power. Below, we will talk about each of the jumpers separately.

PG: This is the program header. If this header is shorted when powering up the unit, you will enter into program mode. Please see the program-mode section of this document for more information.

B: If the program header is not shorted by a jumper, and the "B" header is shorted by a jumper, then you will be in latching mode. If the program header is not shorted by a jumper, and the "B" header is also not shorted, then you will power the device up in momentary mode.

A: This jumper is only used if the program header is not shorted by a jumper, and if the "B" jumper is shorted by a jumper. If the "A" header is not shorted, then the unit will be in latching mode. If the "A" header, AND "B" header are shorted by a jumper, but the program header is not, then you will power the device up in Active-Low latching mode, which means that all outputs are asserted upon power up; meaning that all outputs are high (5v).

EN: If you have this header shorted by a jumper, then the device will be able to receive power from a 9v wall adapter. If you wish to have your Arduino power your Version#2 board, then remove the jumper from the "EN" header, and read the above section: **The Power Supplies (DC Jack or Arduino Power).**

Version#2 Operation & Programming:

This section is essentially the same as the operation/programming section for Version#1. However, there are a few changes made here due to the lack of indicator LEDs. If you have a Version#2 board,

ifically. Due to the lack of indicator LEDs on the version#2 anual to determine how to connect your own external LEDs.

When you power the device on for the first time, you'll need to program in your codes. There are two program modes. One is simple, and one is more customized. The simple programming method is called the "Default programming method". The customized method is called the "Secondary programming method". The default method allows for you to program in eleven codes at once and in order (Ten codes that correspond to outputs 0-9, and one code that acts to remote reset all outputs in latching modes). This takes all of 15 seconds if you have a compatible remote control. The secondary method allows for you to program in an infrared code, and select which output said code will correspond to.

Default Programming Method:

Before you power the device up for the first time, place a jumper on the PG (Program) header. Leave the A/B headers alone. **MAKE SURE THAT THEY ARE NOT SHORTED WITH JUMPERS.** Have your remote control ready, and make sure to know in advance which buttons on your remote that you want to program in for each output. In the video manual, I program in buttons 0-9 on the included remote to correspond to outputs 0 through 9 on the board. This means that if I am successful in programming, when I press button 5 on the remote, then output 5 on the learning board will be activated. I usually use the volume up button on the remote for the 11th code, which acts to reset all of the outputs to default state when in latching modes. If this is confusing to you, please watch the video, as it is very easy to follow. Anyhow, when you power up the device, press the "0" button on the remote. The "CL" signal line will be set to 5v for as long as you are holding the button, then turn off when you let go of the button. In case you didn't know, "set" means 5v, and "clear" means 0v. When the "CL" signal line clears/goes low, you know that you've successfully programmed in a successful code for output#0. Now, follow the same steps for buttons 1-9, and the volume up key. Every time you press a button, the "CL" signal line will be set, then cleared when you let go. After you have programmed in the 11th and final code, the "CL" signal line will stay high. You're all done programming! **Disconnect power and wait ten seconds. During this time, remove the PG header jumper and place it on the "B" header. This will enter you into active-high latching mode. This is a solid test.**

MAKE SURE THAT YOU WAIT TEN SECONDS BEFORE RE-APPLYING POWER TO THE DEVICE OR ELSE THE PROGRAMMED CODES MAY BECOME CORRUPTED.

Once you've performed the task stated above, and you've waited a minimum of ten seconds, plug power back in, and the programmed buttons from your remote should activate the relative outputs talked about above. If you've made your own external LED indicator bank, you should be able to easily verify that the codes were successfully programmed. If you only get a response out of the "CL" signal line and no other output line, then you were unsuccessful. Try again, and wait longer before applying power in latching mode. **The reason why you need to wait so long after disconnecting power is because the on-board capacitors need to discharge. If they are not fully discharged before you power the unit back up, it can confuse the programmed microcontroller.**

Method:

e this method of programming, you will need your own external LED bank. Please consider using a breadboard. This method is more in depth, and requires patience. In this mode, you can program in a code from your IR remote control, and select which output it will correspond to. Before you power the device up for the first time, place a jumper on the PG (Program) header. Leave the A/B headers alone. **MAKE SURE THAT THEY ARE NOT SHORTED WITH JUMPERS.** Once you have the jumper set, press and hold the "SEL" button on the left side of the board and apply power to the device. The "CL" signal line should toggle on and off a few times, then stay on until you remove your finger from the SEL button. When you remove your finger from the SEL button, the "CL" signal line will turn off/clear. At this point, the device will wait for you to enter a code from your infrared remote control. Press any button on your remote, and the "CL" signal line will again be set/go high, and stay high until you've let go of the button on your IR remote control. At this point, the infrared code has been saved, but needs to be allocated to an output.

The next three sections assume that you have LEDs on each of the outputs. These sections assume that you've created your own external LED bank. Press the "SEL" button, and hold it down. You'll see the "0" LED light up for about two seconds. If you continue to hold down the "SEL" button, then the "0" LED will turn off, and the "1" LED will turn on. If you wait two more seconds, the "1" LED will turn off, and the "2" LED will turn on. This will continue as long as you hold down the "SEL" button. The LEDs will turn on and off from 0-9, through to the "CL" signal line LED, which corresponds in this case to the remote reset code. If you continue to hold on to the "SEL" button, then the LED sequence will reset to the "0" LED. At any point, you can remove your finger from the SEL button. Whichever LED is lit up at the time that you remove your finger from the "SEL" button will be the output that will be activated by the IR code that you programmed in. For instance, if you programmed in an IR code from your remote control, and you let go of the "SEL button when LED "5" was lit up, then that specific code from your remote will be saved internally and will correspond to the output#5 LED/Pin. It sounds complicated, but it isn't really all that difficult. Watch the video manual for a full demonstration. Once you've programmed in a code, the unit will wait for another infrared code from the IR remote. Press a different button on the remote, and use the steps above to program that code to correspond to a different output. After a code has been programmed, you can remove power. **DO NOT REMOVE POWER DURING A PROGRAMMING ACTION! ONLY REMOVE POWER ONCE YOU'VE PROGRAMMED IN AS MANY CODES AS YOU'D LIKE.**

Latching Modes:

Active High Latching Mode: In this mode, all of the outputs start off at 0v (LOW). The outputs & corresponding LEDs will toggle high when a correct code is received from the infrared remote that you are using. If you press a button in your IR that corresponds to an output line, then the relative output will toggle high and stay high until you press the same button again. When you press that same button one more time, the same output will toggle from high to low (5v to 0v). You can press the 11th code to reset all outputs to 0v state (clear). You can also manually reset all outputs to the 0v state by pressing the "SEL" button. **Jumper Sequence: Do not short A/PG headers. Short B header.**

all of the outputs start off at 5v (HIGH). The outputs & correct code is received from the infrared remote that you are using. If you press a button in your IR that corresponds to an output line, then the relative output will toggle low and stay low until you press the same button again. When you press that same button one more time, the same output will toggle from low to high (0v to 5v). You can press the 11th code to reset all outputs to 5v state (set). You can also manually reset all outputs to the 5v state by pressing the "SEL" button. **Jumper Sequence: Do not short PG header. Short A/B headers.**

Momentary Mode: In this mode, all of the outputs will be low (0v) when you power up the device. If you press a button on your IR remote that corresponds to a certain output on the learning board, then that output will go from 0v to 5v for as long as you hold down that specific button on your IR remote control. Once you let go of this button, the relative output will return to the 0v state. Only one output can be turned on at one time. The "SEL" and 11th infrared reset code do not have any effect in this mode. **Jumper Sequence: Do not short A/B/PG headers. Leave them all disconnected.**

Version#1 Schematics:

Schematic Diagram Download:

Version#1.pdf

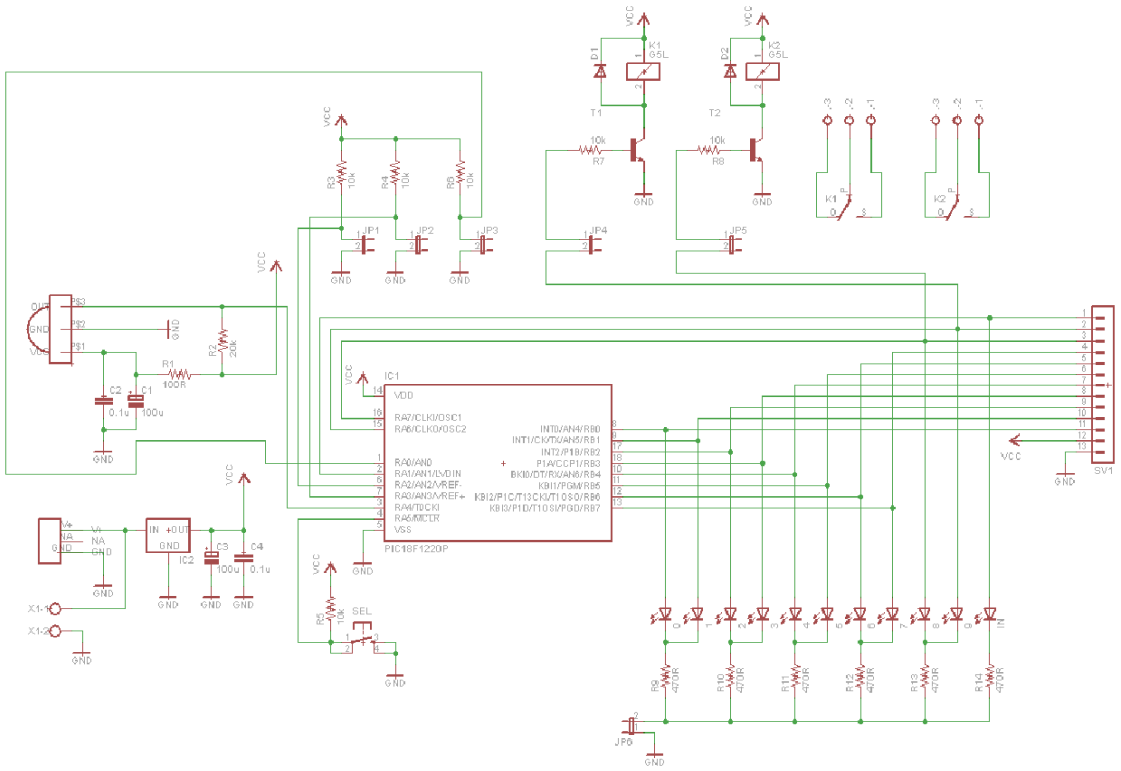

Version#2.pdf

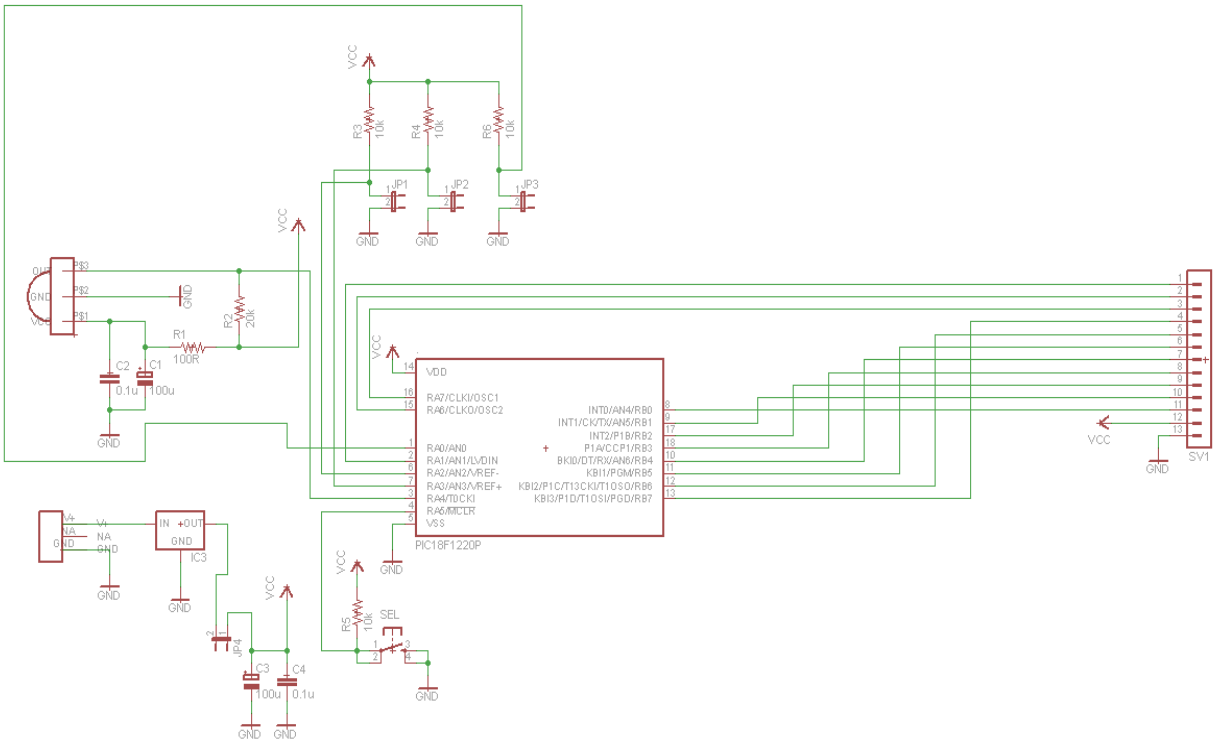

Troubleshooting & Questions

If you run into problems, there may be very simple fixes. The below section is short, but it may very well come in handy if your circuits are not working as you think they should. Below are the tips that you'll need to proceed when stuck!

1) My processor board isn't working. What can I do? Check your connections! If you run into trouble, make sure to watch the video manual.
2) I've programmed my unit with IR codes, but when I enter into latching/momentary modes, I don't get a response. What do I do now? All chips are tested prior to shipment. What you should do is re-program in your codes, then remove power. Go grab a snack, then come back and power up in latching mode to test. Remember, you need to let the capacitors drain before you power up again. If you try this a couple of times and still cannot get a response. Consider how you've handled the device. Are you in an ESD safe place? Could the board have received a shock? The internal EEPROM memory is where codes are saved, and if you have not followed the manual or video manual properly, then you may have corrupted your chip; in which case you will have to contact us to purchase a replacement chip.
3) Some LEDs aren't working on my Version#1 board. What do I do? If you purchased this in kit form, then this is likely a polarity issue that occurred when soldering. If you are certain that the polarity is correct, and it still won't power up, it may have been due to excess heating from your soldering iron. You may need to VERY CAREFULLY de-solder the LED, and replace it with another.
4) My board doesn't power up. What do I do? If you purchased an assembled module, then there is no reason for this. In all likelihood, you just need to ensure that the LED_EN jumper is connected (V1). If you have a Version#1 unit, the LED_EN jumper is connect, and you are using the 5mm jack and still you get no response, then there are two things to consider. First, try using the

5mm DC power jack. It may be that the jack is damaged. It is rare, but it happens.
't operational or compatible. If you have more than one remote around the house,
e "IN" LED.

If all else fails, or if you have other questions, please feel free to contact me through engineeringshock@hotmail.com!