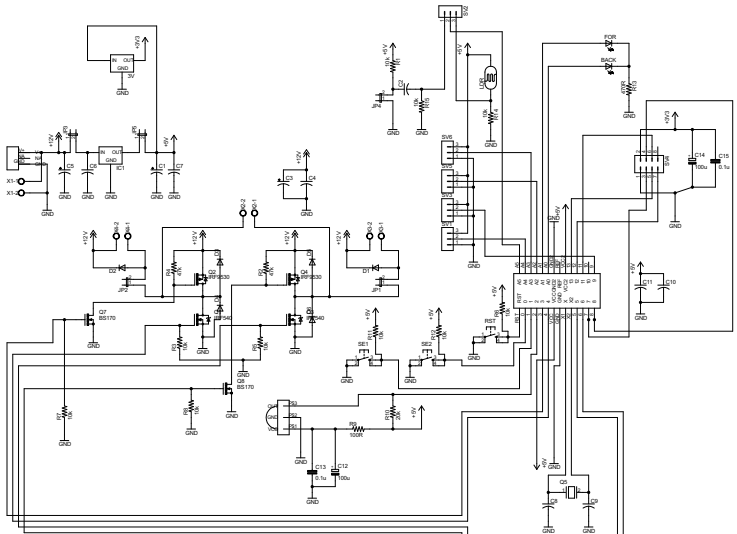

26/09/2019 1:36:27 PM f=0.30 C:\Users\Patrick\Documents\eagle\linear act mag motor\linear mag.sch (Sheet: 1/1)