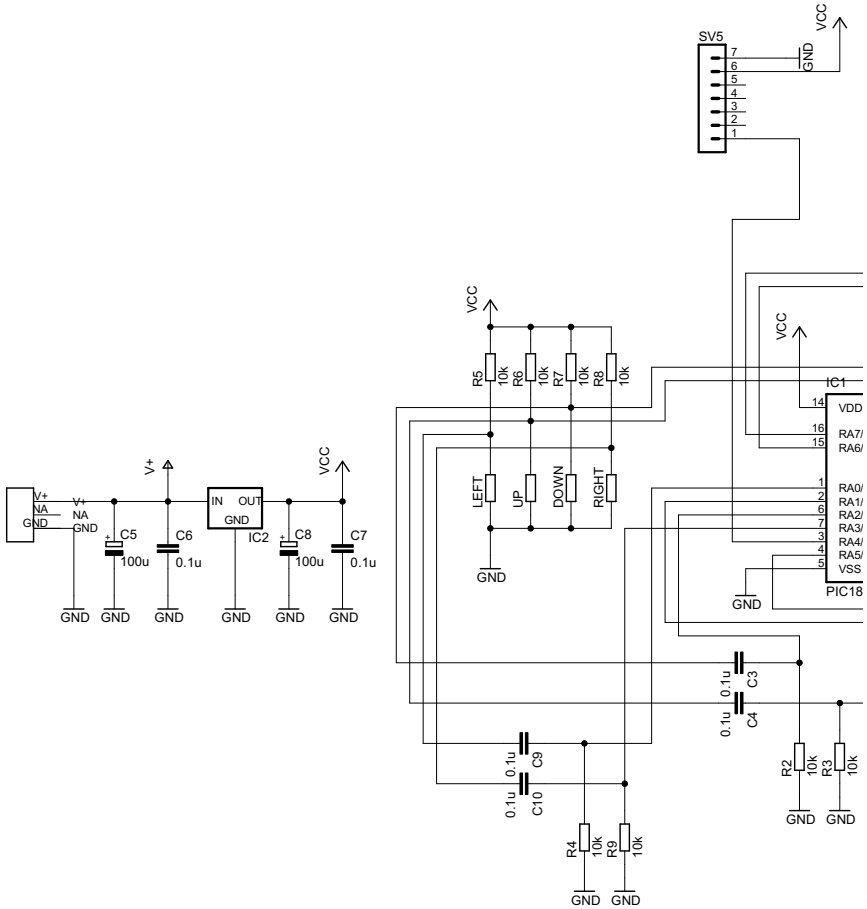
SV5
VCC
GND
IC1
PIC18
VDD
VSS
RA0/
RA1/
RA2/
RA3/
RA4/
RA5/
RA7/
RA6/
LEFT
UP
DOWN
RIGHT
R5 10k
R6 10k
R7 10k
R8 10k
R2 10k
R3 10k
R4 10k
R9 10k
C3 0.1u
C4 0.1u
C9 0.1u
C10 0.1u
V+
NA
GND
C5 100u
C6 0.1u
IN OUT
IC2
C8 100u
C7 0.1u

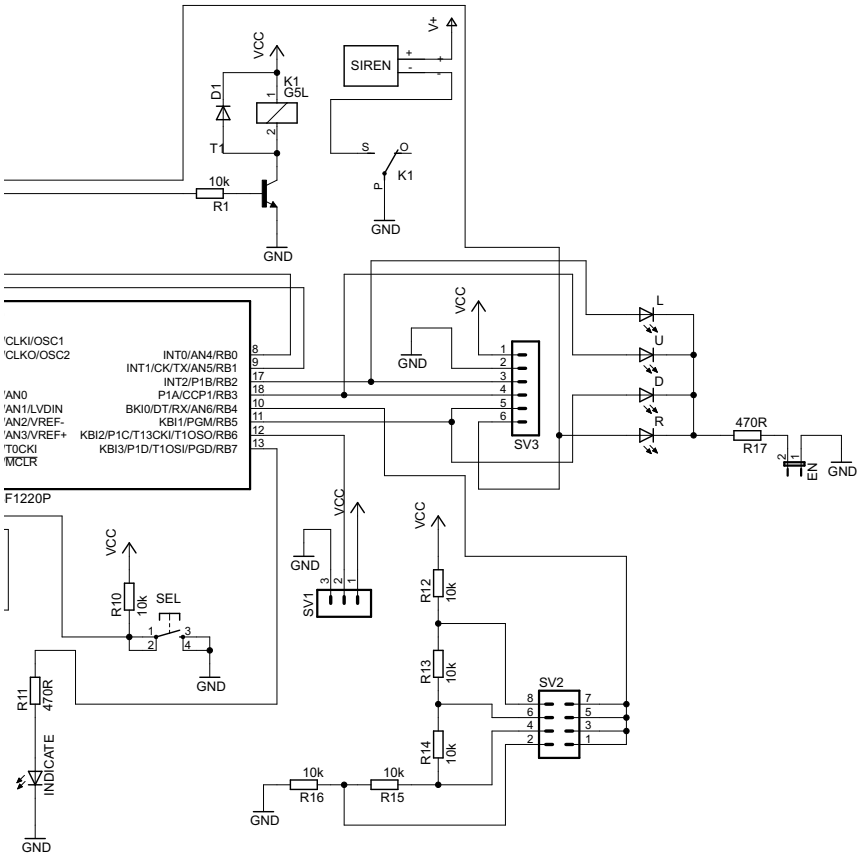
VCC
K1
G5L
D1
T1
10k
R1
GND
SIREN
V+
S
O
K1
P
GND
CLKI/OSC1
CLKO/OSC2
AN0
AN1/LVDIN
AN2/VREF-
AN3/VREF+
T0CKI
MCLR
INT0/AN4/RB0
INT1/CK/TX/AN5/RB1
INT2/P1B/RB2
P1A/CCP1/RB3
BKI0/DT/RX/AN6/RB4
KBI1/PGM/RB5
KBI2/P1C/T13CKI/T1OSO/RB6
KBI3/P1D/T1OSI/PGD/RB7
F1220P
VCC
GND
SV3
L
U
D
R
470R
R17
EN
GND
VCC
R10
10k
SEL
GND
R11
470R
INDICATE
GND
VCC
GND
SV1
VCC
R12
10k
R13
10k
R14
10k
SV2
10k
R16
10k
R15
GND