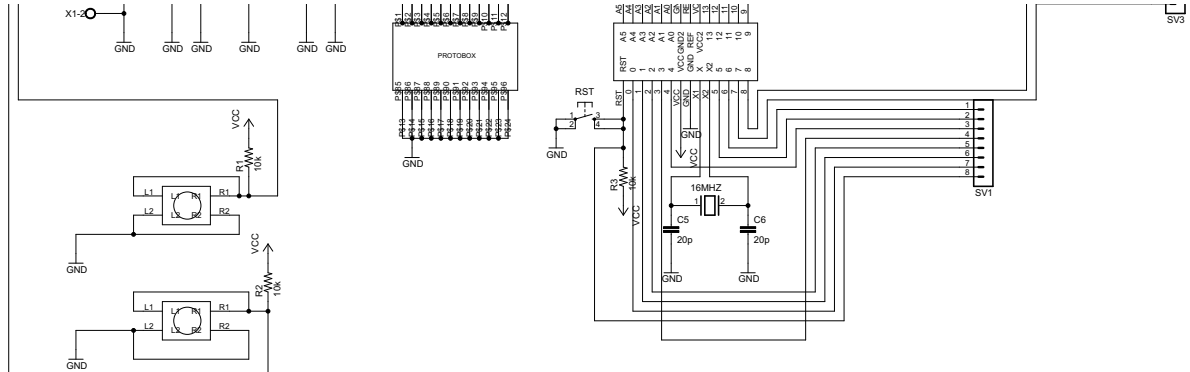

27/05/2015 11:08:38 PM f=0.50 C:\Users\Patrick\Documents\eagle\ATMELProject\Atmel.sch (Sheet: 1/1)

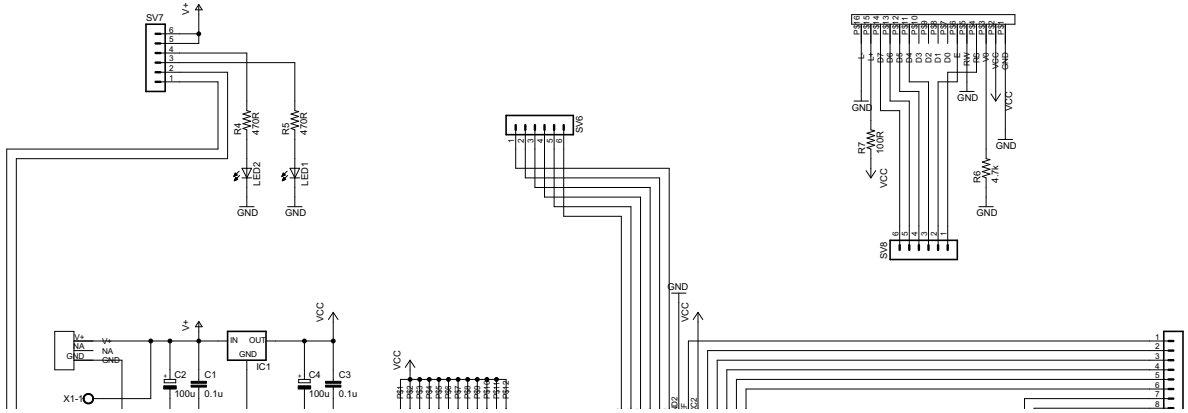
SV7
V+
R4
470R
R5
470R
LED2
LED1
GND
GND
SV6
GND
VCC
R7
100R
VCC
R6
4.7K
GND
SV8
GND
VCC
GND
V+
NA
GND
X1-1
C2
100u
C1
0.1u
IN
OUT
GND
IC1
C4
100u
C3
0.1u
VCC
VCC