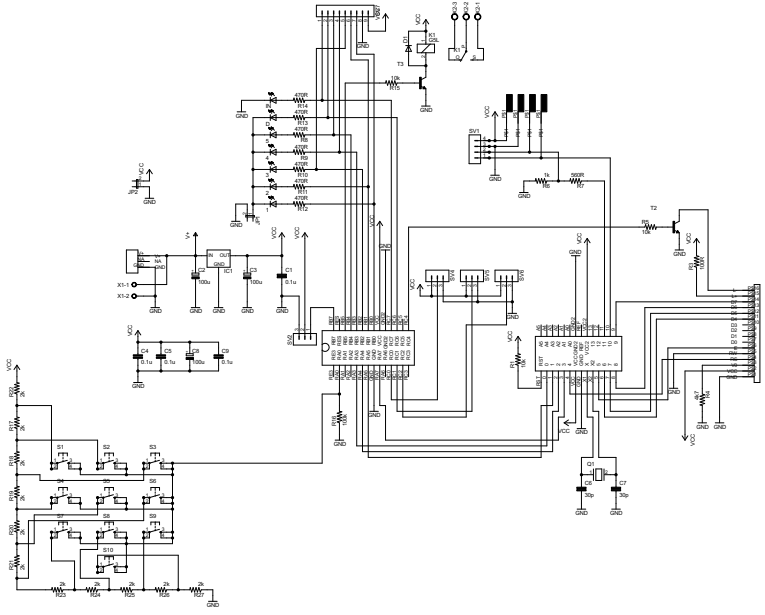

17/02/2015 4:20:21 PM f=0.30 C:\Users\Patrick\Documents\eagle\FINGERPRINT1\fingerprint1.sch (Sheet: 1/1)