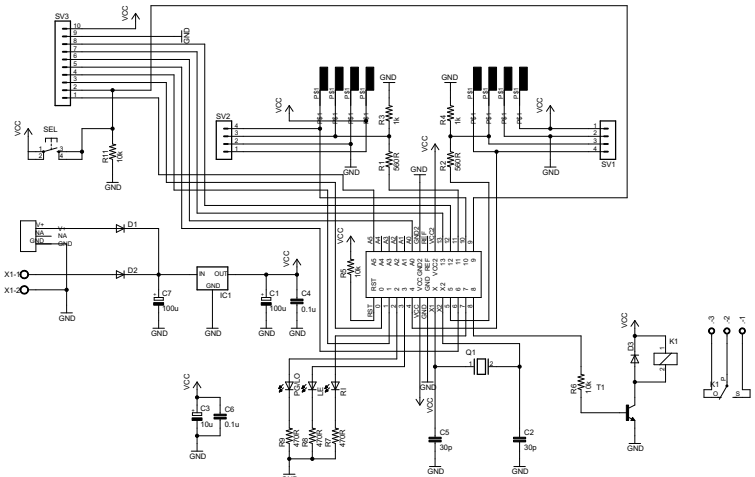

17/02/2015 4:19:40 PM f=0.40 C:\Users\Patrick\Documents\eagle\Fingerprint dual Real\dual finger.sch (Sheet: 1/1)