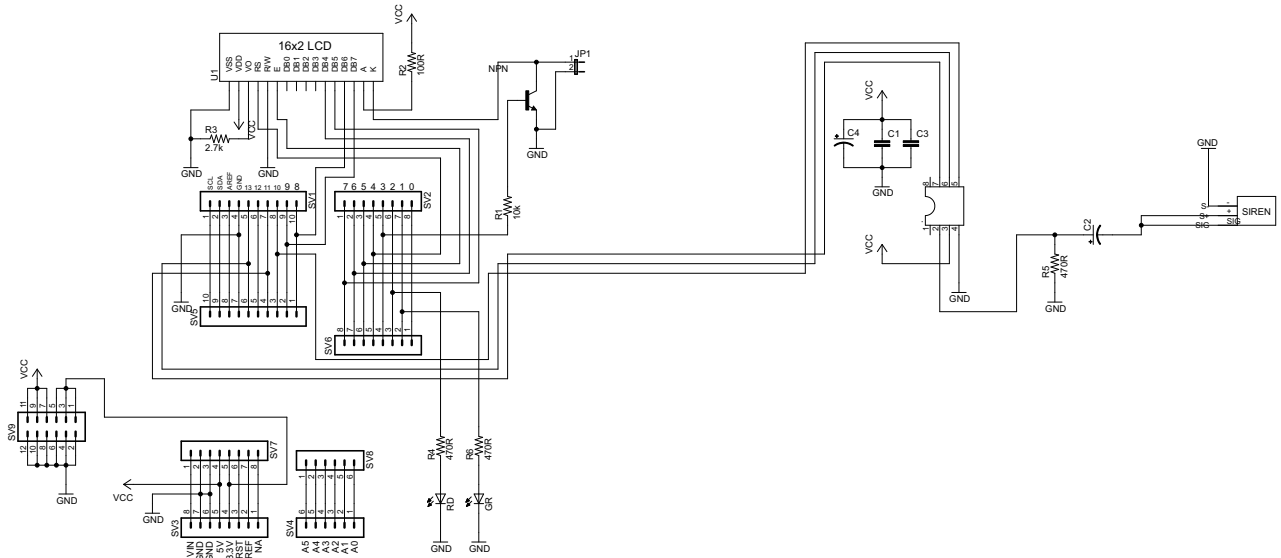

21/02/2019 9:47:06 AM f=0.50 C:\Users\Patrick\Documents\eagle\Arduinio LCD shield\Shield.sch (Sheet: 1/1)